480 Rated Voltage, 600 Max Voltage, Output								
Part Number	Horsepower (HP)	Motor Amps (A)	Maximum Amps (A)	Inductance (uH)	Weight (LBS)	Losses (W)	Available Lug Kit	Terminal Hole Size (Inches)
KDRI2PE3R	150	180	200	52	120	135	SLK11	0.38

575 Rated Voltage, 600 Max Voltage, Output								
Part Number	Horsepower (HP)	Motor Amps (A)	Maximum Amps (A)	Inductance (uH)	Weight (LBS)	Losses (W)	Available Lug Kit	Terminal Hole Size (Inches)
KDRI32PE3R	200	192	200	52.9	115	135	SLK11	0.38

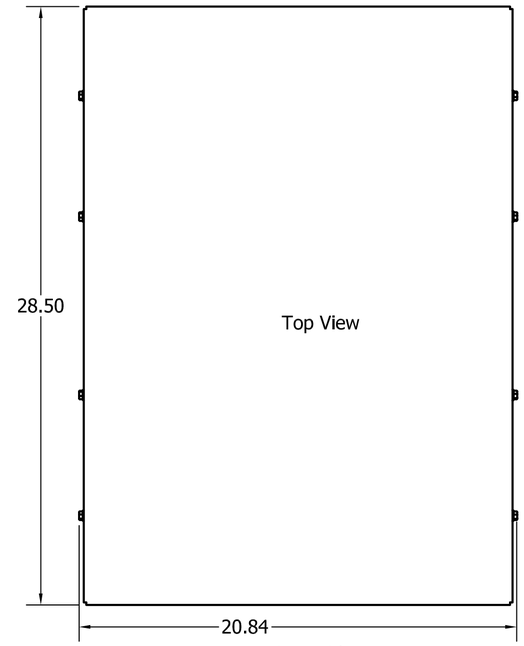

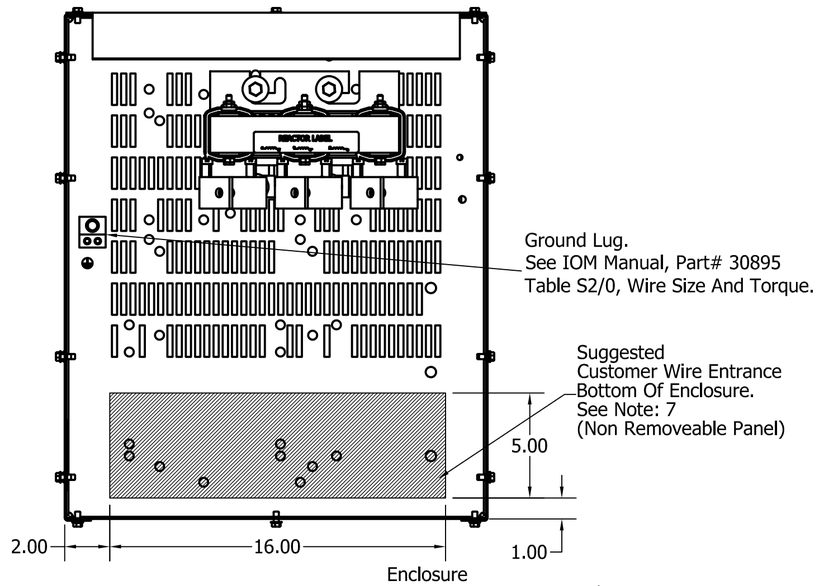

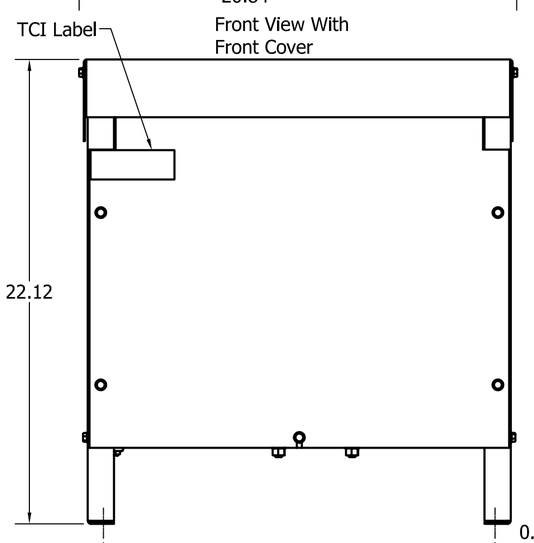

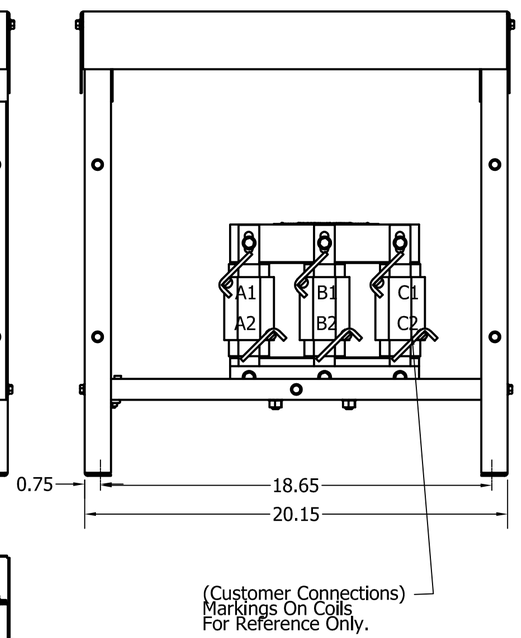

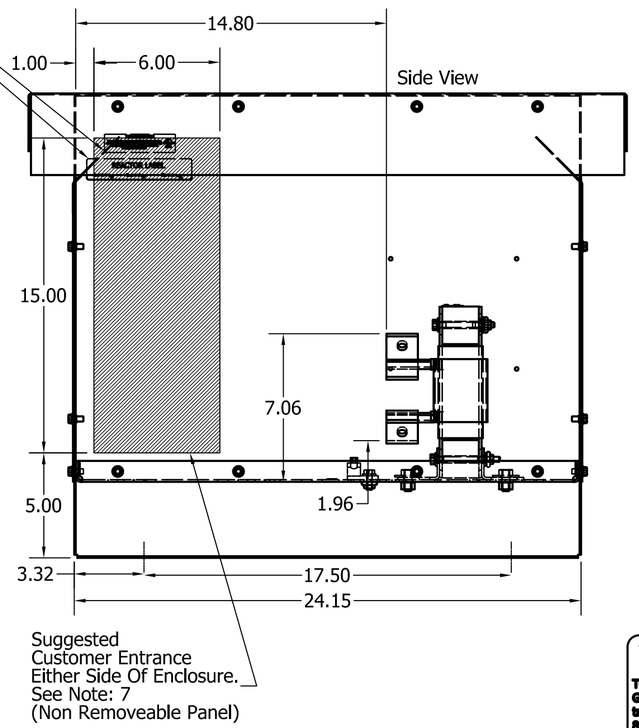

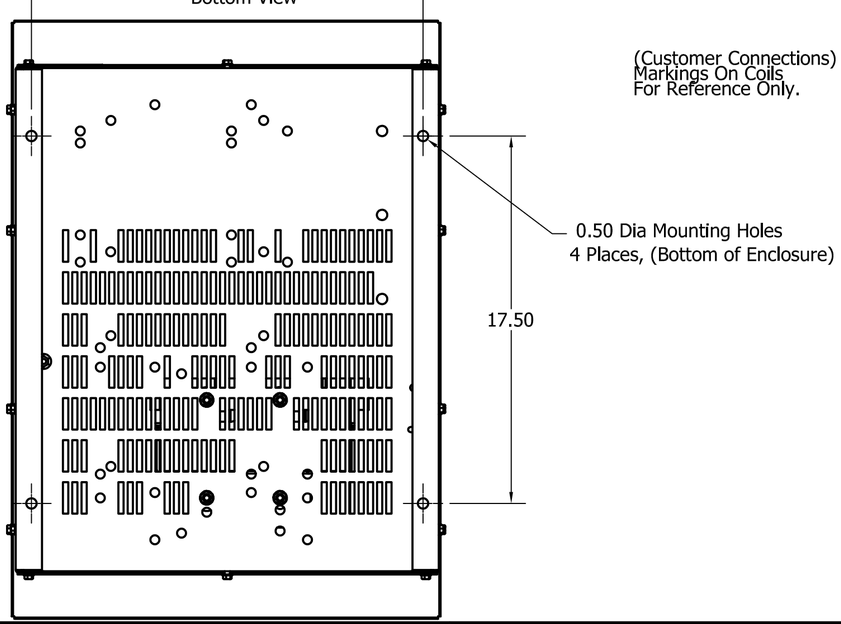

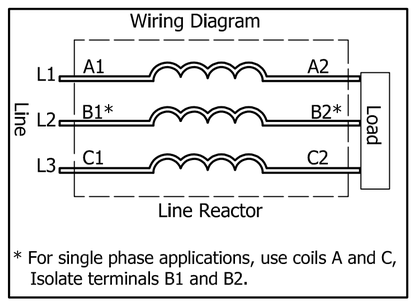

* For single phase applications, use coils A and C, Isolate terminals B1 and B2.

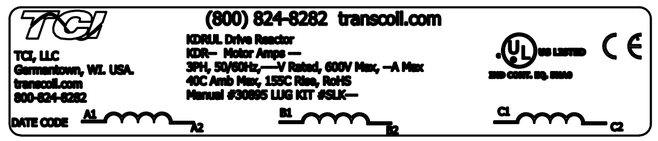

Notes:

1. KDR Lug Kits sold separately. Contact TCI.
2. For KDRUL Version With Terminal Lugs Attached, See Sheet 4
3. UL file number: cULus Listed File E116124.
4. KDR Drive Reactors Comply With The Thermal and Altitude Standards Set Forth by NEMA ST20-1992.
5. KDR IOM Manual Part Number 30895
6. Material(s) Shall be RoHS Compliant
7. Customer Is Responsible For Installation To Meet All National And Local Electrical Codes.

TCI, LLC CLAIMS PROPRIETARY RIGHTS IN THE MATERIAL HEREIN DISCLOSED. IT IS SUPPLIED WITHOUT PREDJUDICE TO ANY PATENT RIGHTS OF TCI AND MAY NOT BE REPRODUCED OR USED TO MANUFACTURE ANYTHING SHOWN THEREIN WITHOUT WRITTEN PERMISSION FROM TCI.

NO	REVISION	DATE	BY
A	Combined Drawings	4/24/18	DSW

TOLERANCES (EXCEPT AS NOTED)
DECIMAL
.XX ± .25
.XXX ± .10
FRACTIONAL
± 1/16
ANGULAR
± 1°

TCI
W132 N10611 Grant Drive
Germantown, WI 53022

KDR I Frame, Copper Bus, Enclosed
Type 3R, Reactor Drawing

DRN. BY: DSW
DATE: 4/24/18
SCALE: 1/5
APRVD:
SIZE: C
107620DG
SHT.3 OF 8